ORLACO
Specialised Camera Solutions

ORLACO -

ORL0506953
PTZ Camera Aluminium PAL RS232

PRODUCT DESCRIPTION

SPECIFICATIONS

Image Format	PAL
IP Class	IP69K
Supply Voltage DC Max	30 V DC
Supply Voltage DC Min	18 V DC
Temperature range from	-40 °C
Temperature range to	85 °C
Vibration Resistance	50G

Electrical connections

Cable Base, Art no 1221300
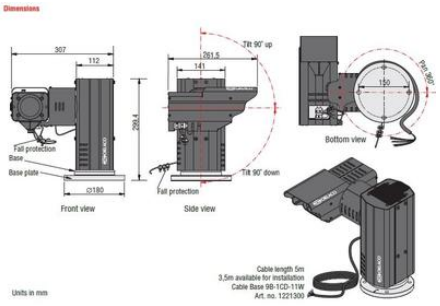
	RS232	RS485			
1 = Coax core	Video	Video			
2 = Coax shielding	Video GND	Video GND			
3 = Red	Camera power	Camera power			
4 = Black	Camera 0V	Camera 0V			
5 = Red/White	Pan/Tilt power	Pan/Tilt power	1 = Red/blue	N.C.	Cut off at wire entry (In Junction box)
6 = Black/White	Pan/Tilt 0V	Pan/Tilt 0V	2 = Black/blue	N.C.	
7 = Green	Serial 1 RS-232 TX	B (inv)	3 = Blue	N.C.	
8 = Grey	Serial 2 RS-232 RX	A (non-inv)	4 = Brown	N.C.	
9 = Black/Gray	Serial 0V		5 = Shielding	N.C.